Tube Dimensions and Abbreviations:

Outside Diameter (OD)
Inside Diameter (ID)
Wall Thickness (W)
Length (L)
Inch (") or (in)
Feet (') or (ft)

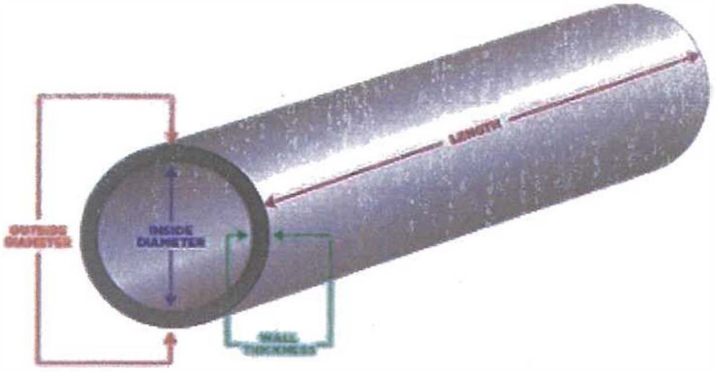


Common calculation used in tube manufacturing to find Wall Thickness:

$$W = \frac{OD - ID}{2}$$

The same equation can be used to find OD or ID:

$$OD = ID + W + W$$

$$ID = OD - W - W$$

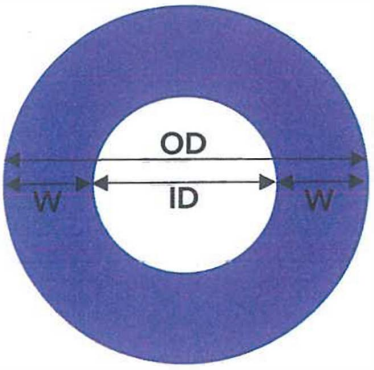


Tubes are measured in inches. Portions of an inch are often represented either using decimal or fraction form.

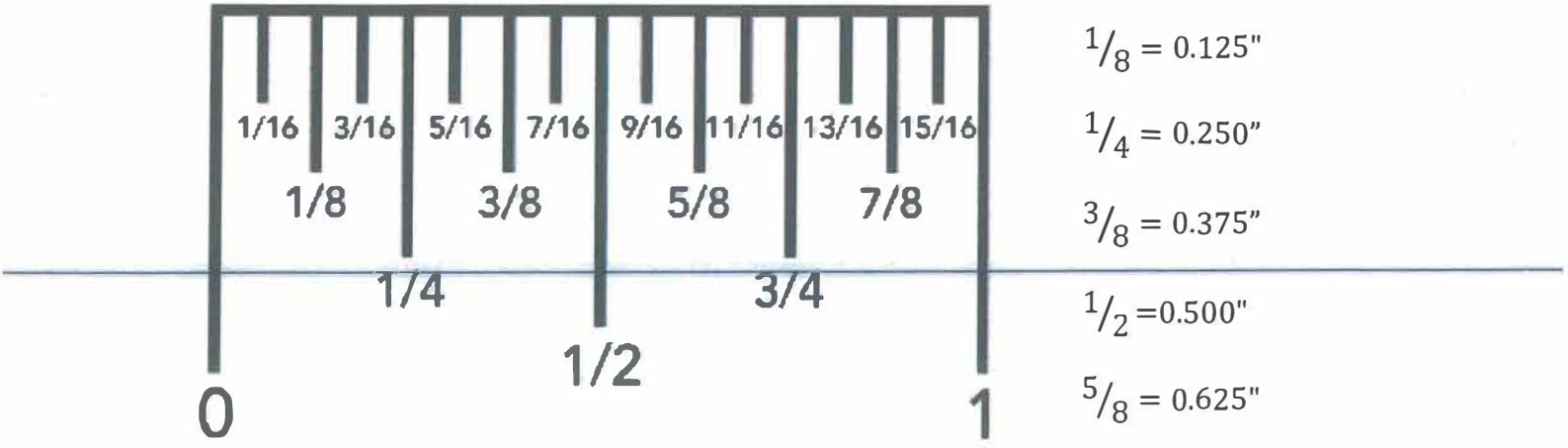


$^1/_{16} = 0.0625"$

$^1/_8 = 0.125"$

$^1/_4 = 0.250"$

$^3/_8 = 0.375"$

$^1/_2 = 0.500"$

$^5/_8 = 0.625"$

$^3/_4 = 0.750"$

Tubing dimensions have an acceptable range called a Tolerance.
Tolerance provides the size of the largest accepable tube and the smallest acceptable tube.
Tolerance is represented using the symbols: ± and +/-

The largest and smallest acceptable sizes are calculated by adding and subtracting the tolerance from the expected size.

Example 1:
0.108" ± 0.0005"
Smallest acceptable tube = 0.1075"
Largest acceptable tube = 0.1085"

Example 2:
0.300" ± 0.0002"
Smallest acceptable tube = 0.2998"
Largest acceptable tube = 0.3002"

Example 3:
0.053" ± 0.001"
Smallest acceptable tube = 0.052"
Largest acceptable tube = 0.054"

Name: _____ Date: _____

1. **Label** the tube drawing with the tubing dimensions:
   (Fill in the boxes)

   Outside Diameter (OD) = 0.108 inches

   Inside diameter (ID) = 0.053 inches

   Wall Thickness (W) = 0.0275 inches

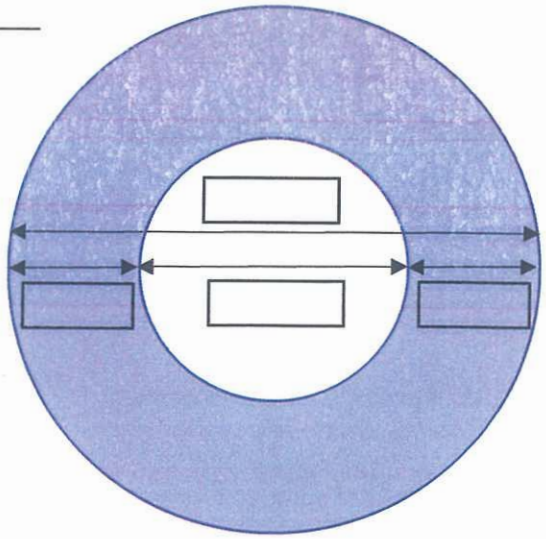

2. Calculate the **Wall Thickness (W)** using the dimensions:

   Outside Diameter (OD) = 0.3125 inches

   Inside diameter (ID) = 0.2885 inches

   Wall Thickness (W) = ☐.☐☐☐☐

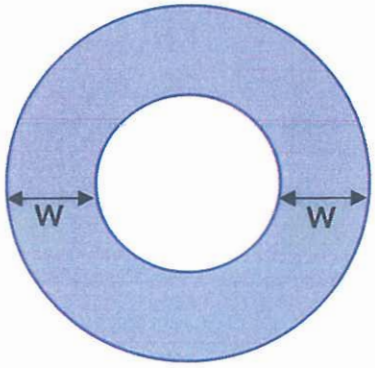


3. Calculate the **Inside Diameter (ID)** using the dimensions:

   Outside Diameter (OD) = 0.140 inches

   Wall Thickness (W) = 0.030 inches

   Inside diameter (ID) = ☐.☐☐☐☐

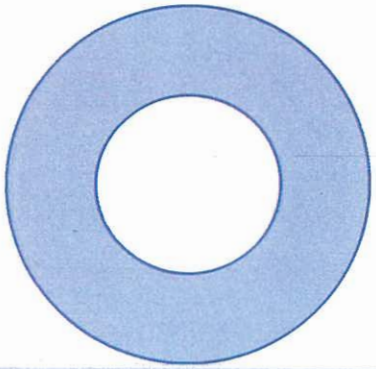

4. What is the **decimal** equivalent of the fractions:

   $\frac{7}{8}$ = ☐.☐☐☐☐

   $\frac{3}{4}$ = ☐.☐☐☐☐

Name: _____ Date: _____

5. Calculate the **acceptable range:**

0.285" ± 0.005"

Smallest acceptable tube: ☐☐☐☐☐.☐

Largest acceptable tube: ☐☐☐☐☐.☐

6. Calculate the **acceptable range:**

0.080" ± 0.0002"

Smallest acceptable tube: ☐☐☐☐☐.☐

Largest acceptable tube: ☐☐☐☐☐.☐

7. At Accu-Tube, we measure tube in feet. Most of our tube is cut to twelve (12) foot lengths. Calculate the **number of total feet** for the number of tube lengths:

32 tubes × 12' tubes = _____ ft

65 tubes × 12' tubes = _____ ft

8. At Accu-Tube, we use a chart to track our tube sample measurements. This helps us monitor our production and make equipment adjustments. The chart uses the tube dimension and tolerance to determine if each tube measurement is acceptable.

**Circle Pass or Fail** for each sample using the tolerance to determine the largest and smallest acceptable measurement. An example is provided.

Tube OD: 0.108" Tolerance: ± 0.0003"

| Part Measurement | Example | | Sample 1 | | Sample 2 | | Sample 3 | | Sample 4 | | Sample 5 | |
|---|---|---|---|---|---|---|---|---|---|---|---|---|
| 0.1084" | | | | | | | | | | | | |
| 0.1083" | | | | | | | | | | | | |
| 0.1082" | | | | | | | | | | | | |
| 0.1081" | | | x | | | | | | | | x | |
| 0.1080" | | | | | | | | | | | | |
| 0.1079" | x | | | | | | | | | | | |
| 0.1078" | | | | | x | | | | | | | |
| 0.1077" | | | | | | | x | | | | | |
| 0.1076" | | | | | | | | | x | | | |
| | Pass | Fail | Pass | Fail | Pass | Fail | Pass | Fail | Pass | Fail | Pass | Fail |
| | | | ☐ | ☐ | ☐ | ☐ | ☐ | ☐ | ☐ | ☐ | ☐ | ☐ |

9. We have a bundle of 125 tubes that are each 11' 2" long.

What is the total footage of the bundle? _____